MONOBLOCK VERNIER CALIPER

- Strictly made in accordance with DIN862
- Supplied in fitted solid ABS case with special branded plastic bag and warranty letter in it

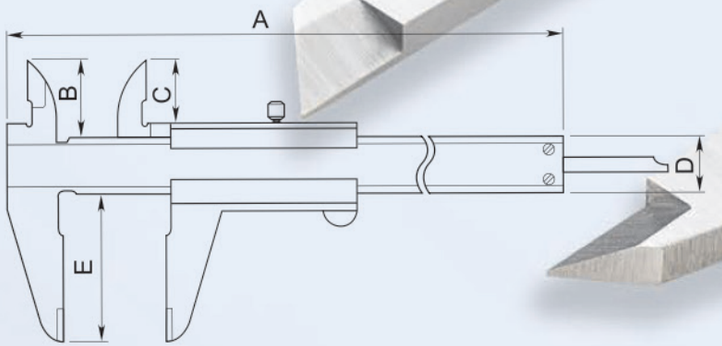

Unit:mm

Code	Range	Graduation	A	B	C	D	E	Accuracy
1120-3114	0-100/0-4"	0.05/1/128"	160	18	13.5	12	30	0.05
1120-3115	0-150/0-6"	0.05/1/128"	235	21	16.5	16	40	0.05
1120-3116	0-160/0-6.3"	0.05/1/128"	238	23	17.5	15.5	40	0.05
1120-3120	0-200/0-8"	0.05/1/128"	298	24	19.5	16	50	0.05
1120-3130	0-300/0-12"	0.05/1/128"	410	28	22	20	64	0.05
1380-3004	0-100/0-4"	0.02/1/128"	160	18	13.5	12	30	0.03
1380-3005	0-150/0-6"	0.02/0.001"	235	21	16.5	16	40	0.03
1380-3006	0-160/0-6.3"	0.02/0.001"	238	23	17.5	15.5	40	0.03
1380-3010	0-200/0-8"	0.02/0.001"	298	24	19.5	16	50	0.03
1380-3015	0-300/0-12"	0.02/0.001"	410	28	22	20	64	0.03

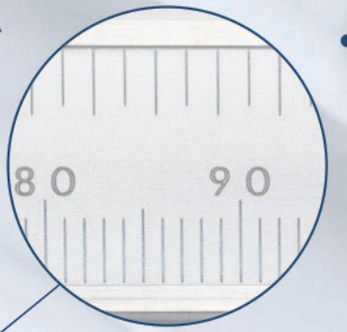

- Distinct lines and figures laser etched on satin chrome finish

- Surfaces of beam ground (Parallelism less than 0.015, 20% better than normal) to ensure smooth movement throughout

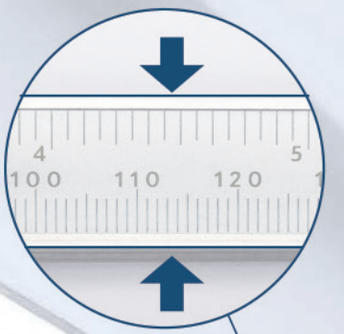

- Jaws ground to raise the accuracy of measurement